ALPHA WIRELESS

…Changing the way wireless networks are built.

INNOVATIVE ANTENNA SOLUTIONS

CANISTER | CONCEALMENT | PANEL | SMALL CELL

ABOUT US

Founded in 2007 in Ballybrittas, Co Laois, Ireland.

Over 60 Customers in 22 Countries globally.

Customers include:

- Major tier 1 and mid tier MNOs
- Neutral hosts
- OEMs
- WISPs

Manufactured in Ireland.

EXECUTIVE SUMMARY

- Top outdoor small cell vendor in the US*
- Over 38,000 small cells shipped into the US since 2017
- The biggest and broadest CBRS portfolio available in the market
- Over 25,000 CBRS antennas shipped to-date globally
- We have the building blocks to customise new solutions
- We move fast. Our policy is concept-to-product in 90 days

*EJL Wireless Research Report 2017

MISSION

Alpha Wireless understands that wireless service providers face a daunting task of satisfying growing demand for coverage and capacity while minimizing the cost to serve. The old models of network deployment are no longer sustainable, so Alpha Wireless is …changing the way wireless networks are built.

INNOVATIVE

Market-leading, world-first, game-changing
– this is what Alpha Wireless is determined to be.

AGILE

At Alpha Wireless flexibility is at the heart of what we do, developing solutions that meet our customers exact requirements.

RESPONSIVE

Building strong relationships enabling us to provide fast and efficient solutions with minimal fuss.

PRODUCT FAMILIES

CANISTER

Canisters combine multiple antennas into one cylindrical ultra-compact package.

CONCEALMENT

This family of antenna solutions are specifically designed to fit discreetly into there surroundings.

PANEL

Panel antennas include 4x4 and 8x8 MIMO antennas supporting Beamforming.

SMALL CELL

A family of ultra-compact antennas covering 3.5 GHz, 2.6 GHz, 2.1 GHz, 600 MHz with Sectors, Omnis and Back-to-Back antennas.

CUSTOMERS

Sprint
T-Mobile
MBNL
NOKIA
Telstra
ROGERS
vodafone
3
ERICSSON
Airspan
Bell
CROWN CASTLE
EE
SAMSUNG
extenet SYSTEMS
XPLORNET
Telrad
We're on your wavelength.
O2
RELIANCE
c spire

AT ALPHA WIRELESS...

Performance matters

Aesthetics matter

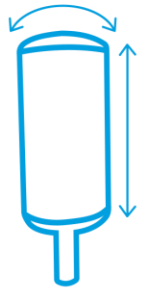

Size matters

Collaboration matters

Sprint CAN
CONCEALED ANTENNA NODE

+ COLLABORATION

Antenna & Shroud
+
Radio & Power
=
Integrated Solution

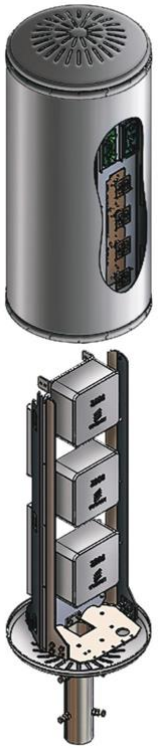

0 DAYS White Board Session
Develop antenna and shroud for their small cell deployments.

90 DAYS The CAN Prototype
First prototype built and tested in the Sprint lab.

120 DAYS Deployed in the US Columbus Market
We began working with their supply chain team.

Sprint rCAN

ROOFTOP CONCEALED ANTENNA NODE

+ COLLABORATION

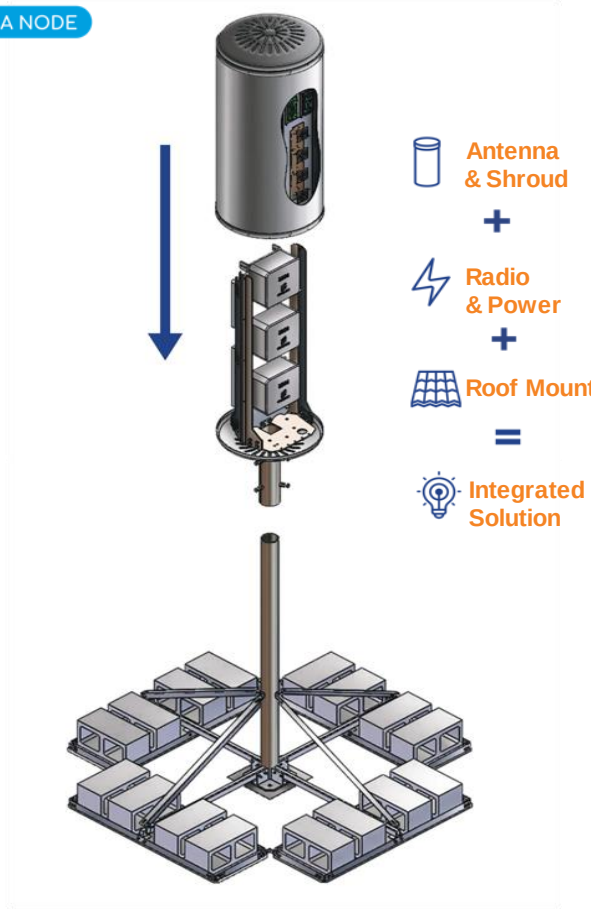

- **0 DAYS** White Board Session
  While developing the CAN concept. The need arose for an OTARD compliant product.
- **90 DAYS** Developed rooftop CAN (rCAN)
- **100 DAYS** Deployed on Sprint store rooftop

OTARD COMPLIANT <1m

CROWN CASTLE

AW3639

10 PORT, SMALL CELL

COLLABORATION

0 DAYS — White Board Session

Virtual white board session held to design a solution for the Super Bowl.

85 DAYS — Prototype PIM AW3639 10 Port, Small Cell

Built and tested to specific requirements.

120 DAYS — Product delivered and deployed

News quickly spread. Verizon placed an order shortly after and Crown Castle ordered a further batch.

MULTIBAND
SMALL CELL ANTENNA FAMILY

20 PORT
MET PANEL

10 PORT
MET PANEL

10 PORT
MET OMNI

8 PORT
eRET PANEL

10 PORT MET PANEL
BACK-TO-BACK

MULTIBAND SMALL CELL ANTENNA FAMILY

- Small form factor
- Ideal for providing high capacity in densely populated areas
- Multi-band, multi-port facilitates maximum utilization of spectrum holdings
- Discreet, low visual impact
- Single band models optimized for 2.5 GHz and 3.5 GHz

MULTIBAND OPTIONS COVER:
617-960MHz
1710-2690 MHz
3400-3800 MHz
5150-5925 MHz

PANEL
ANTENNA

Low Band Dipoles optimized to be invisible to the Mid Band patterns

Mid Band Dipoles include filters to eliminate “CMR” caused by Low Bands

All 4 models can be configured as MET’s or RET’s

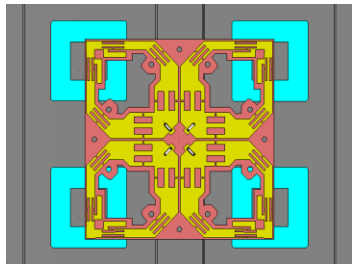

Y - 1695-2690MHz
R - 617-960MHz
P - 3400-3800MHz
O – 5000-6000MHz

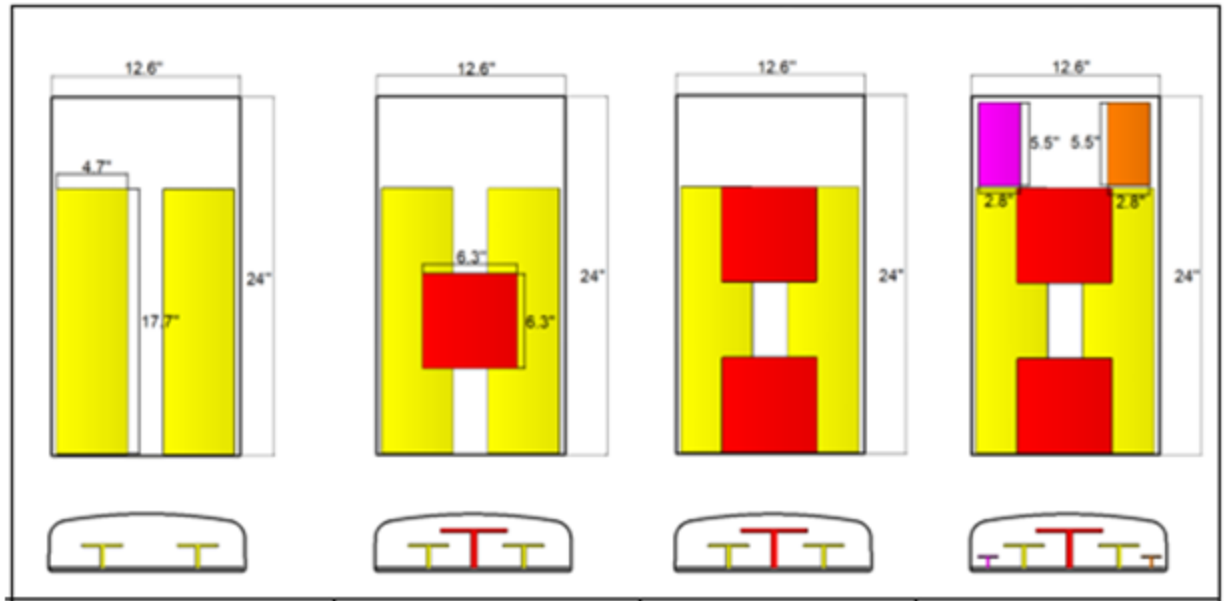

AW3741 Array	AW3742 Array	AW3743 Array	AW3744 Array
Y1	Y1	Y1	Y1
Y2	Y2	Y2	Y2
	R1	R1	R1
		R2	R2
			P1
			O1
4	6	8	12

CANISTER

OMNI PATTERN

Same Radiator Technology as the Pa

4x4 MIMO achieved using our patent Configuration

This minimizes null's in the pseudo-c

Improves MIMO performance by hav arrays offset by 60°

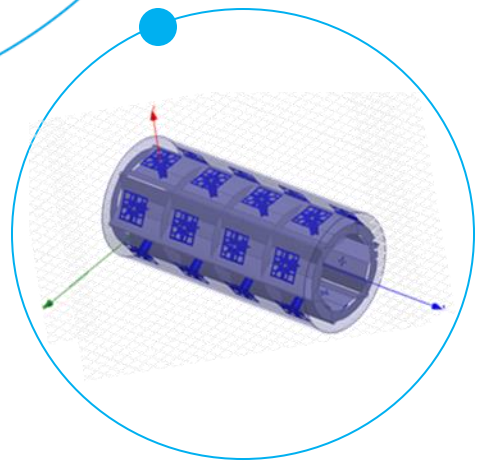

Y - 1695-2690MHz
R - 617-960MHz
P - 3400-3800MHz
O – 5000-6000MHz

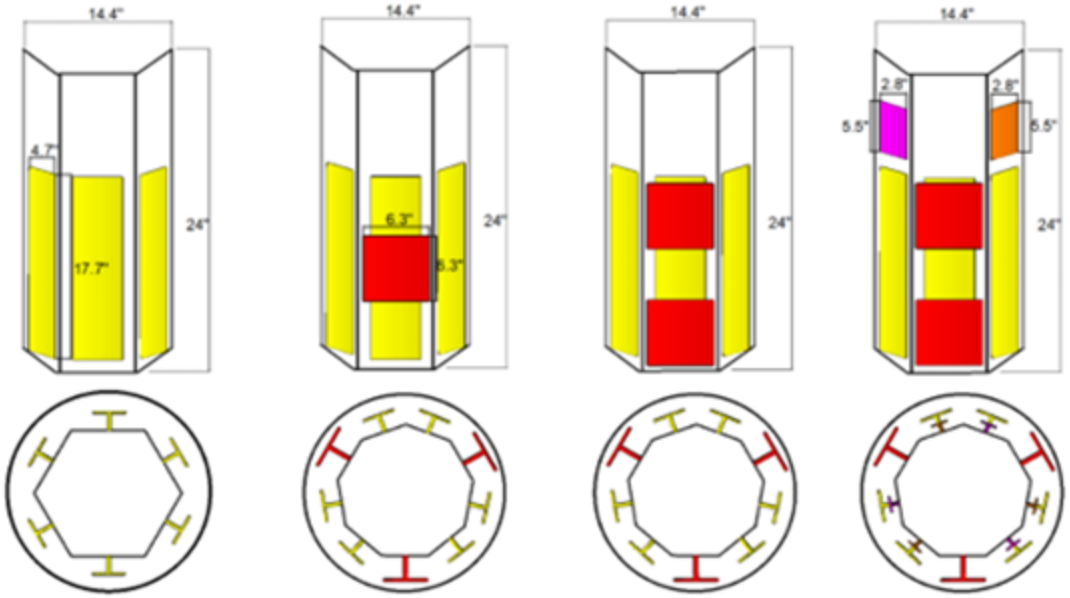

AW3488 Array	AW3745 Array	AW3746 Array	AW3747 Array
Y1	Y1	Y1	Y1
Y2	Y2	Y2	Y2
	R1	R1	R1
		R2	R2
			P1
			O1
4	6	8	12

GRANTED US PATENTS: 10,164,346, 10,403,986

CANISTER

PEANUT SHAPE PATTERN

Same Radiator Technology as the Panels

Back to Back Panels connected with 2-way dividers

They can be designed to allow +/-30° per sector

This can allow patterns to be adjusted to minimize interference

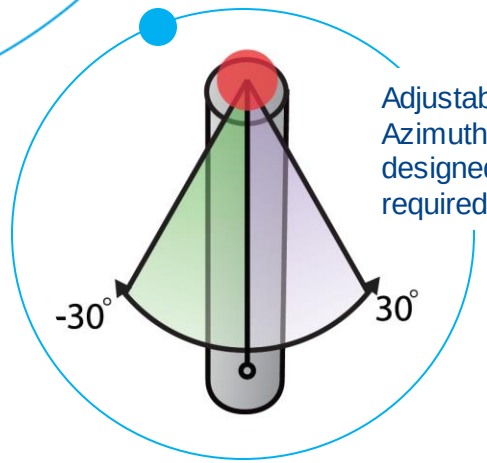

Adjustable Azimuth can be designed as required

Y - 1695-2690MHz

R - 617-960MHz

P - 3400-3800MHz

O – 5000-6000MHz

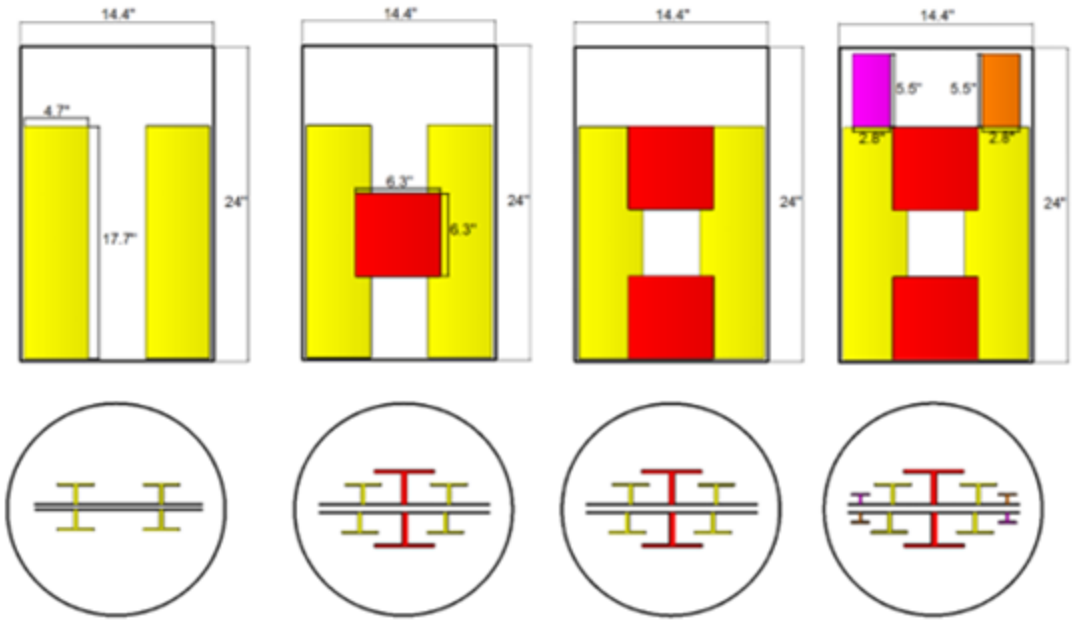

AW3748 Array	AW3749 Array	AW3750 Array	AW3751 Array
Y1	Y1	Y1	Y1
Y2	Y2	Y2	Y2
	R1	R1	R1
		R2	R2
			P1
			O1
4	6	8	12

QUALITY ASSURANCE

- All Radiation Patterns are tested at our inhouse test facility
- 100% tested for Return Loss, Isolation and Passive Intermodulation
- Low RET Failure rate. 2 fails out of 3195 RET units shipped.
- Introduction of Vecta Labs test technology to Alpha Wireless.
- Uses Pneumatic Vibration technology to simulate real world conditions.
- Units are vibrated during Passive Intermodulation Testing

SUMMARY

- Cloak dipole technology for optimal patterns
- Patented technology for pseudo omni antennas
- Adjustable back-to-back antenna helps minimise interference
- All modules can be available with MET or RET technology on mid-bands
- Designed and engineered to superior quality and high performance

CONTACT US

alphawireless.com

sales@alphawireless.com

+1 913 279 0008 US

+353 57 86 33847 IRELAND

MIKE GULLEDGE

HEAD OF SALES, ALPHA WIRELESS

mgulledge@alphawireless.com

+ 1 6787 721320

FOLLOW US

AlphaWirelessLTD

AlphaWireless

AlphaAntennas

#InnovationisCore

#5G-OurFutureTransformed

#VisuallyAmbient